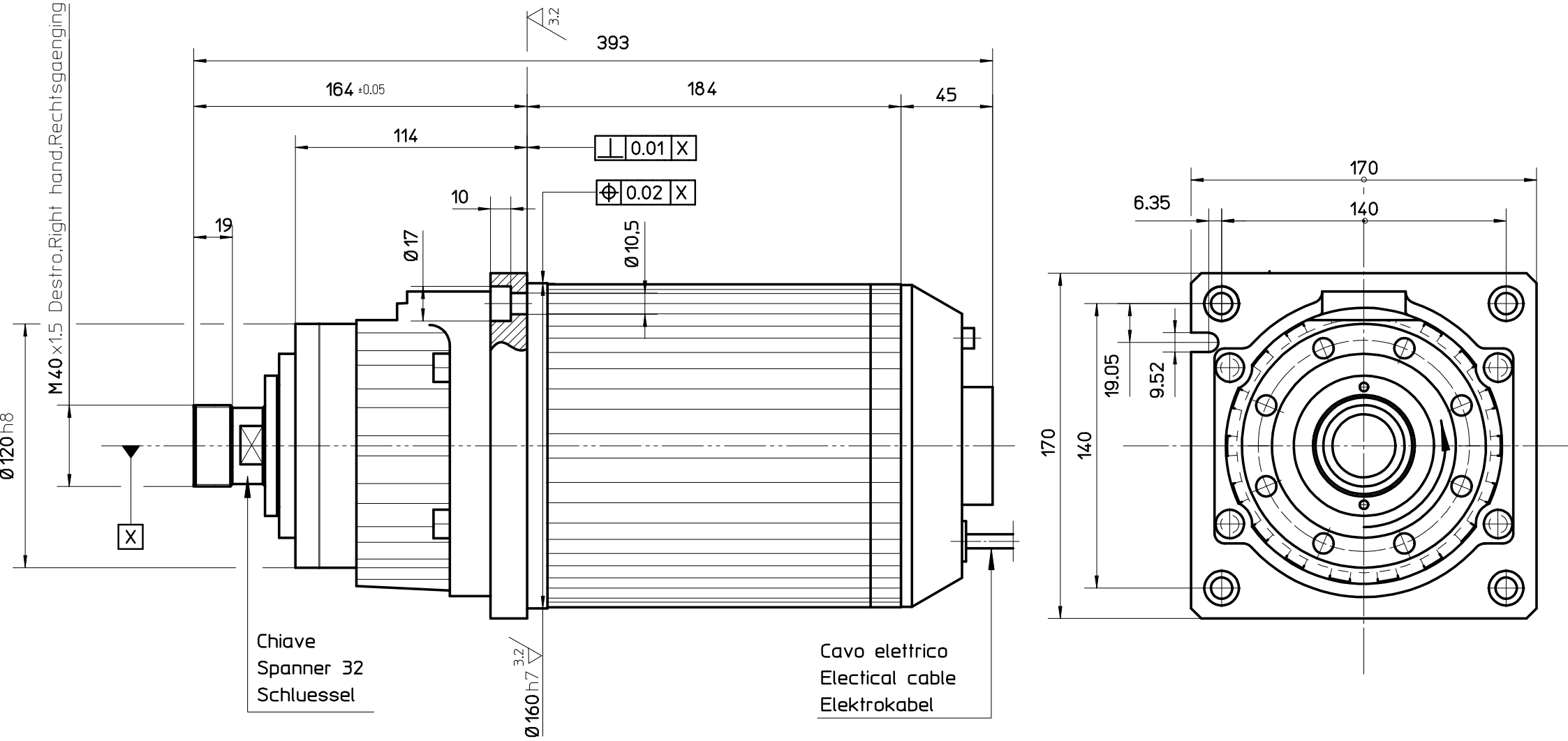
Destro,Right hand,Rechtsgaenging
M40x1.5
Ø120h8
X
393
164 ±0.05
184
45
114
19
10
Ø17
Ø10.5
0.01 X
0.02 X
3.2
Ø160h7
Chiave
Spanner 32
Schluessel
Cavo elettrico
Electical cable
Elektrokabel
170
6.35
140
19.05
9.52